8255 PPI

- PPI

  Programmable Peripheral Interface

Intel 8255 PPI

PPI – Programmable Peripheral Interface

It is an I/O port chip used for interfacing I/O devices with microprocessor

Very commonly used peripheral chip

Knowledge of 8255 essential for students in the Microprocessors lab for Interfacing experiments

8255 PPI contd.

3 ports in 8255 from user's point of view

- Port A, Port B and Port C.

Port C composed of two independent 4-bit ports

- PC7-4 (PC Upper) and PC3-0 (PC Lower)

A1	A0	Selected port
0	0	Port A
0	1	Port B
1	0	Port C
1	1	Control port

PIO

- It has 24 I/O lines which are individually programmed in two groups of 12 lines each or 3 groups of eight lines.
- 2 groups of I/O pins are named as group A and Group B.
- Group A contains 8 bit Port A PA0 – PA7 and 4 bit port C PC7-PC4
- Group B contains 8 bit Port B PB0 – PB7 and 4 bit port C PC3-PC0.
- The Port C Upper and Lower can be used in combination as an 8 bit Port C.

8255 -PPI

Programmable Peripheral Interface

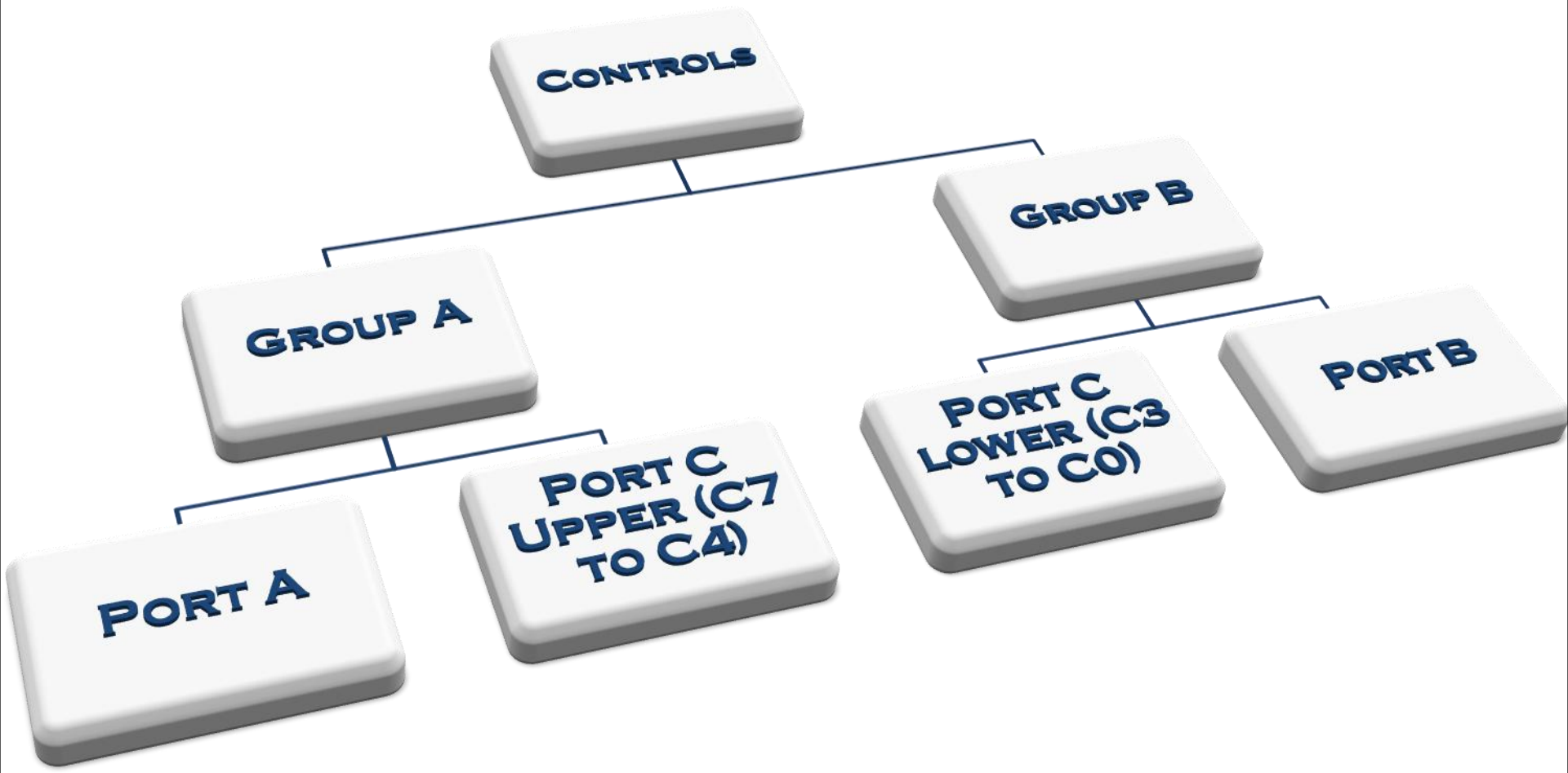

- All these ports can function independently either as input or as output ports.
- This can be achieved by programming the bits of an internal register of 8255 called as Control Word Register CWR.
- The read/write control logic manages all of the internal and external transfer of both data and control word.
- The 8 bit, 3 state bidirectional buffer is used to interface the 8255 internal data bus with the external system data bus.

Pin diagram

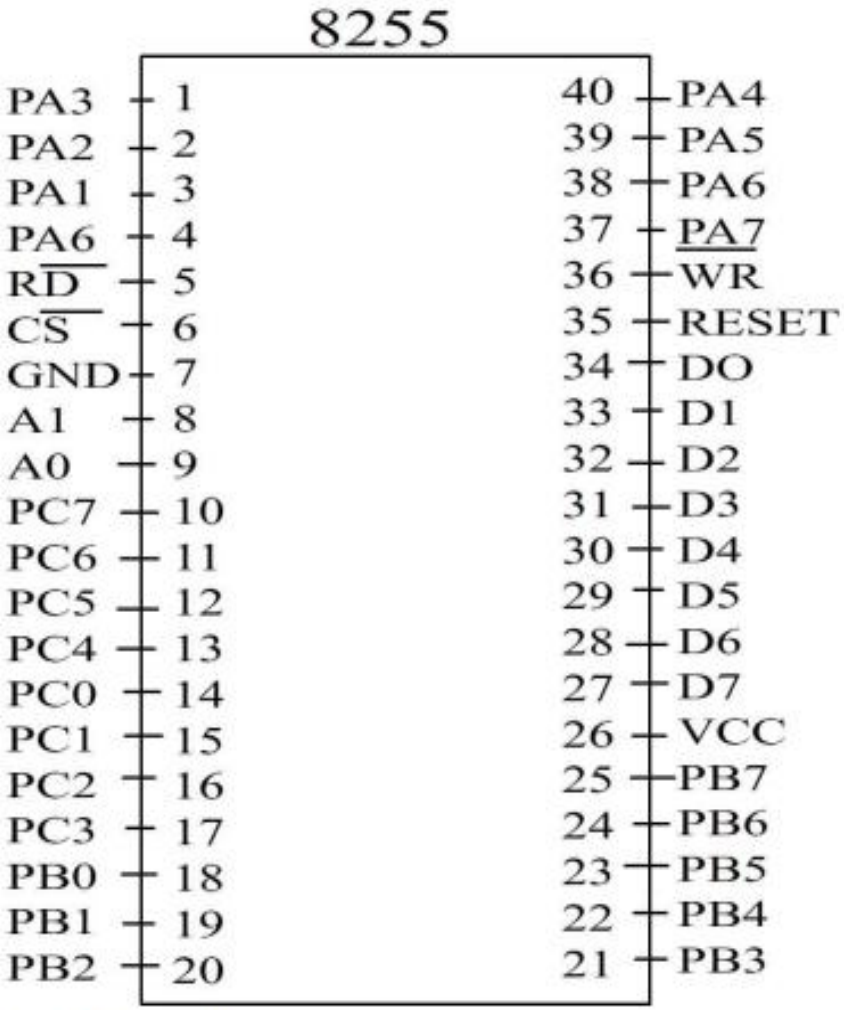

PIN Names

RESET – Reset input

$\overline{CS}$ - Chip selected

$\overline{RD}$ - Read input

$\overline{WR}$ - Write input

A_0 A_1 – Port Address

PA_7 – PA_0 – PORT A

PB_7 – PB_0 – PORT B

PC_7 – PC_0 – PORT C

VCC - +5v

GND - Ground

8255 Programmable Peripheral Interface (cont.)

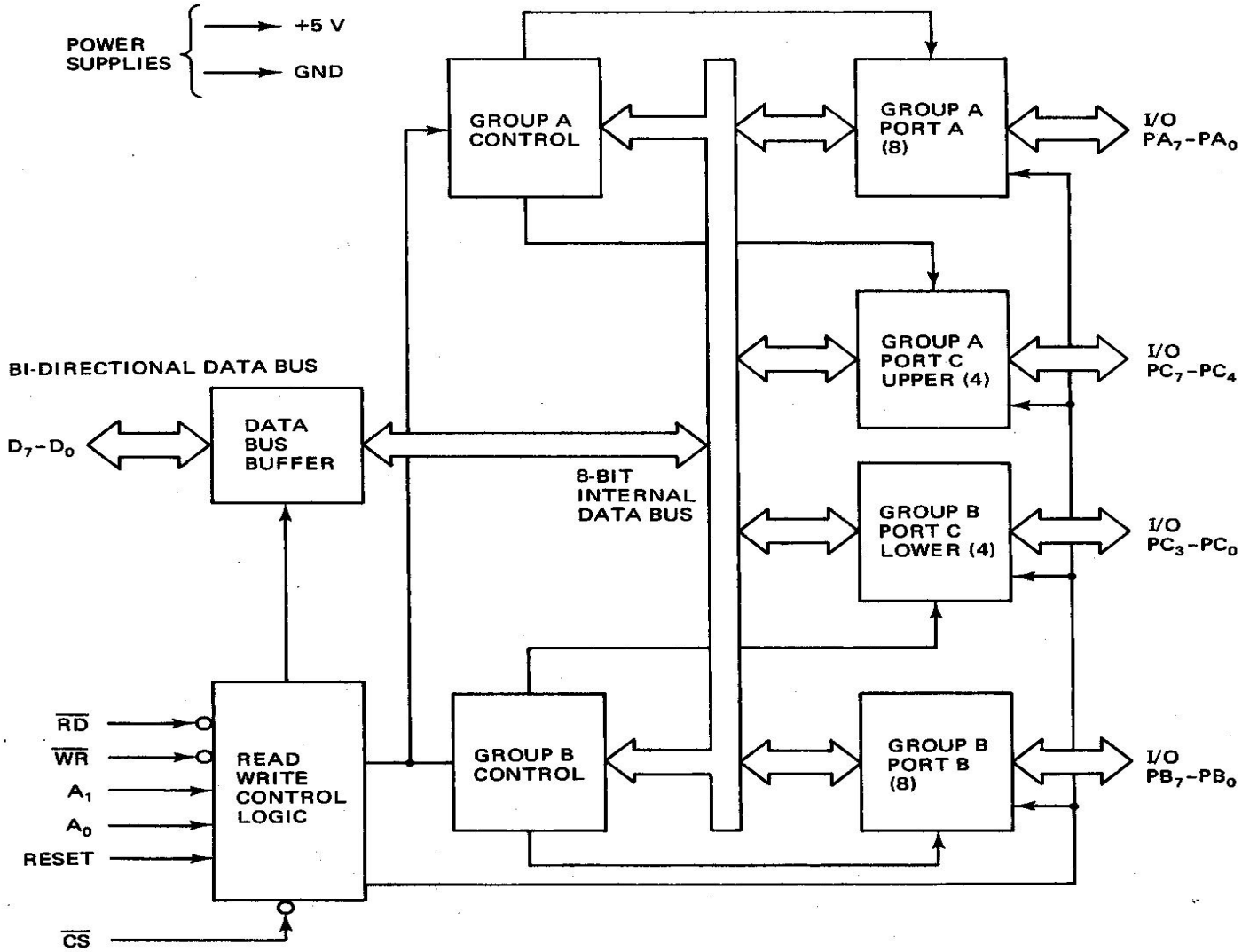

82C55A Programmable Peripheral Interface (cont.)

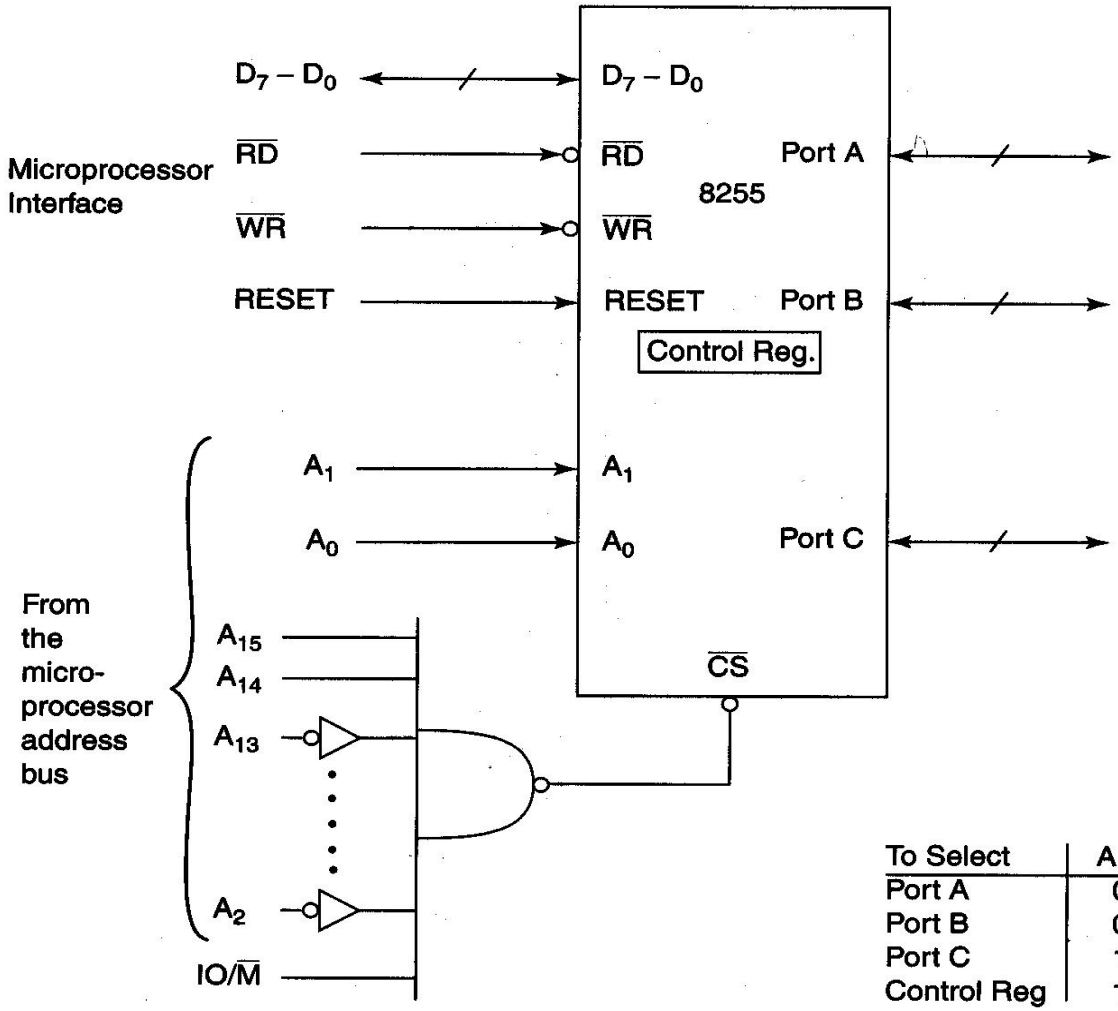

To Select	$A_1A_0,\overline{CS}$
Port A	00 , 0
Port B	01 , 0
Port C	10 , 0
Control Reg	11 , 0

Control Word Register

$\overline{RD}$	$\overline{WR}$	$\overline{CS}$	A_1	A_0	Input (Read) cycle
0	1	0	0	0	Port A to Data bus
0	1	0	0	1	Port B to Data bus
0	1	0	1	0	Port C to Data bus
0	1	0	1	1	CWR to Data bus

$\overline{RD}$	$\overline{WR}$	$\overline{CS}$	A_1	A_0	Output (Write) cycle
1	0	0	0	0	Data bus to Port A
1	0	0	0	1	Data bus to Port B
1	0	0	1	0	Data bus to Port C
1	0	0	1	1	Data bus to CWR

$\overline{RD}$	$\overline{WR}$	$\overline{CS}$	A_1	A_0	Function
X	X	1	X	X	Data bus tristated
1	1	0	X	X	Data bus tristated

8255 –PPI Modes of Operation

Programmable Peripheral Interface

Modes

BSR
BIT SET-REST

I/O MODE

MODE 0
Basic I/O Mode

MODE 1
Strobed I/O Mode

MODE 2
Strobed
Bidirectional
I/O

Modes of operation of 8255

- There are two modes of operation of 8255
  - I) I/O mode and
  - II) Bit Set Reset Mode (BSR)
- I/O mode work as programmable I/O ports while BSR mode only port C (PC0 to PC7) can be used to set and reset its individual port bits.
- Under I/O mode there are 3 modes
  - mode 0
  - mode 1 and
  - mode 2.

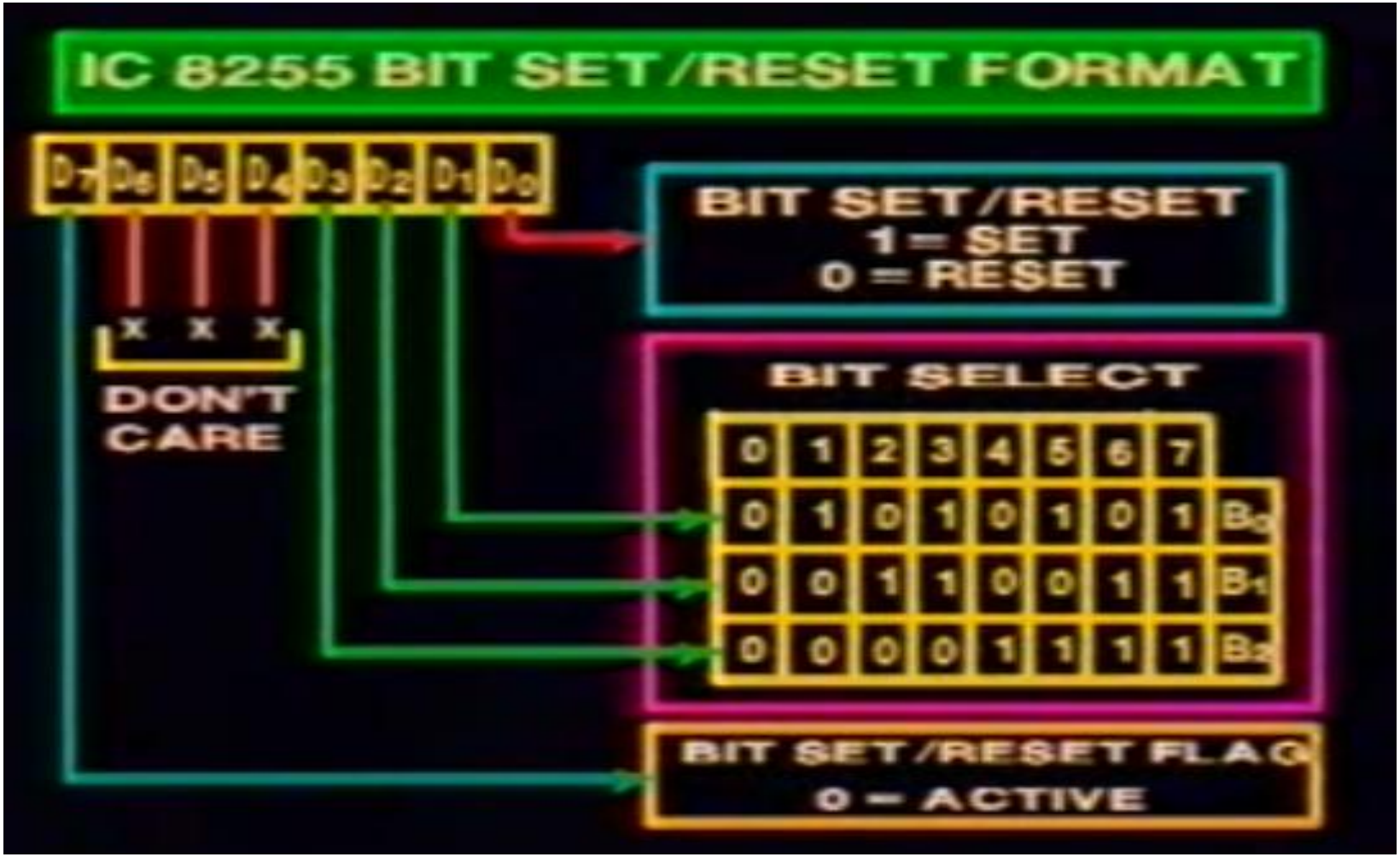
IC 8255 BIT SET/RESET FORMAT
D7 D6 D5 D4 D3 D2 D1 D0
X X X
DON'T CARE
BIT SET/RESET
1 = SET
0 = RESET
BIT SELECT
0 1 2 3 4 5 6 7
0 1 0 1 0 1 0 1 B0
0 0 1 1 0 0 1 1 B1
0 0 0 0 1 1 1 1 B2
BIT SET/RESET FLAG
0 = ACTIVE

BSR MODE

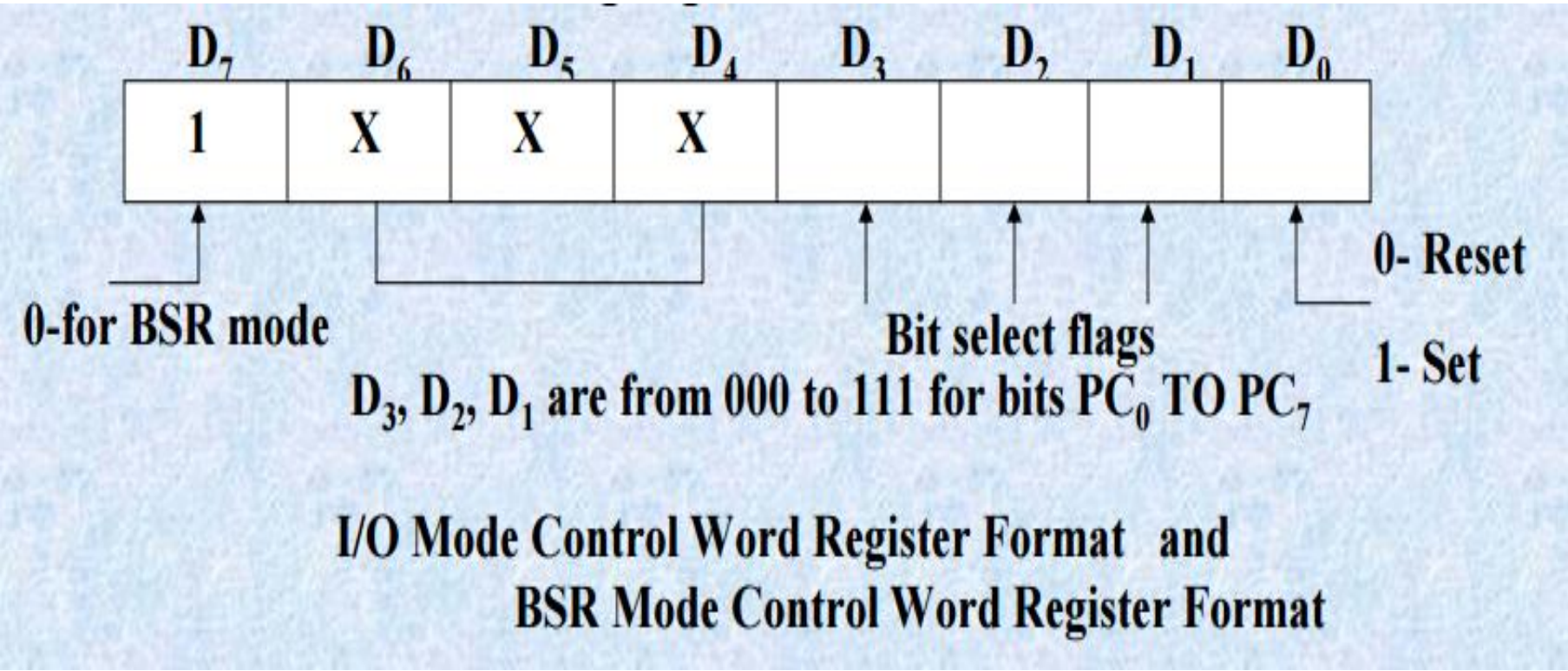
D7 D6 D5 D4 D3 D2 D1 D0
1 X X X
0-for BSR mode
Bit select flags
0- Reset
1- Set
D3, D2, D1 are from 000 to 111 for bits PC0 TO PC7
I/O Mode Control Word Register Format and
BSR Mode Control Word Register Format

I/O Mode

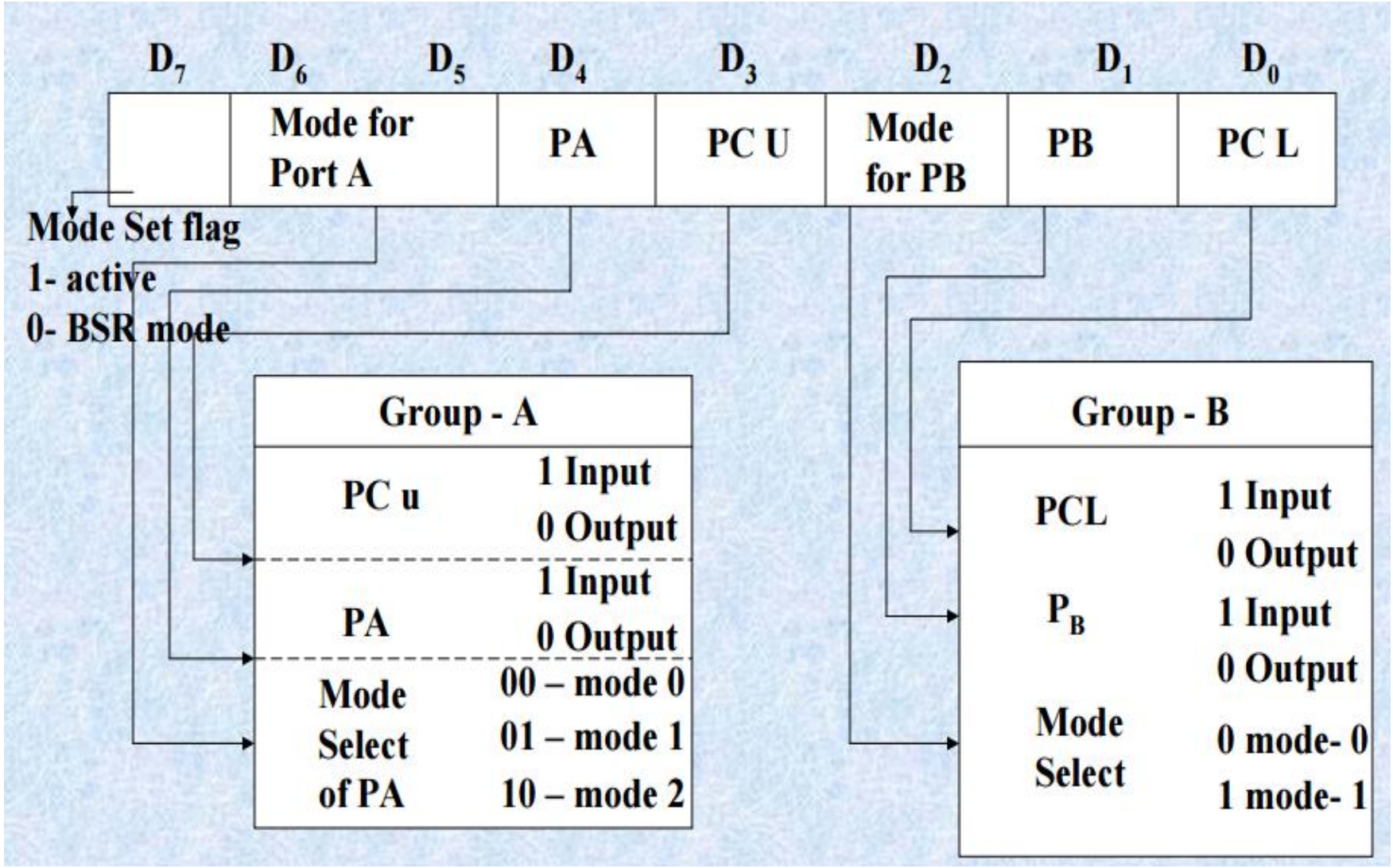
D7
D6
D5
D4
D3
D2
D1
D0
Mode for Port A
PA
PC U
Mode for PB
PB
PC L
Mode Set flag
1- active
0- BSR mode
Group - A
PC u
1 Input
0 Output
PA
1 Input
0 Output
Mode Select of PA
00 – mode 0
01 – mode 1
10 – mode 2
Group - B
PCL
1 Input
0 Output
PB
1 Input
0 Output
Mode Select
0 mode- 0
1 mode- 1

Programming 82C55

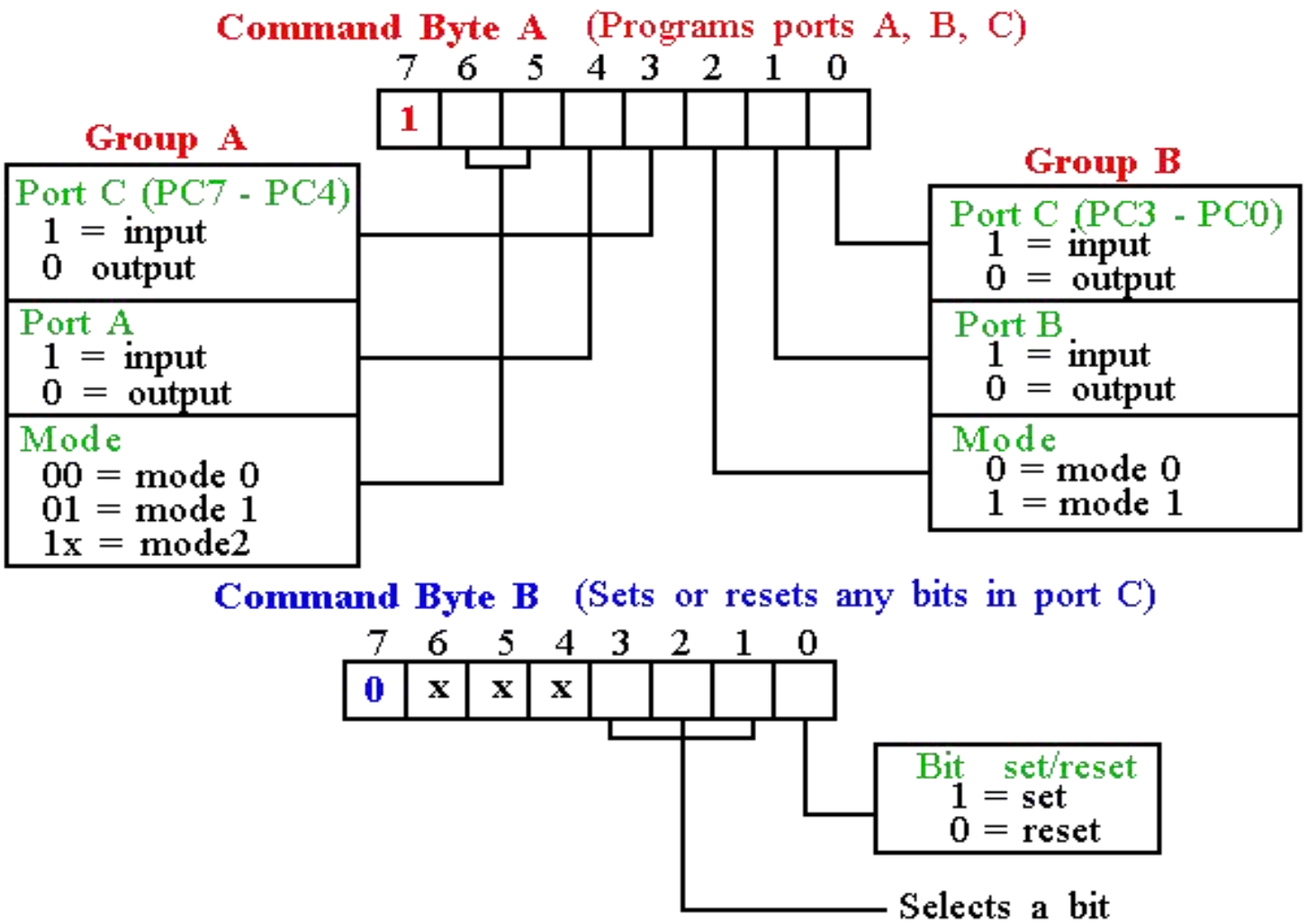

8255 PPI Contd.

Mode 0: Simple Input or Output

In this mode, ports A, B are used as two simple 8-bit I/O ports
port C as two 4-bit ports.
Each port can be programmed to function as simply an input port or an output port. The input/output features in Mode 0 are as follows.

1. Outputs are latched.

2. Inputs are not latched.

3. Ports don’t have handshake or interrupt capability.

82C55A Programmable Peripheral Interface (cont.)

- Mode 0 – Simple I/O operation

Pin	MODE 0 IN	MODE 0 OUT
PA_0	IN	OUT
PA_1	IN	OUT
PA_2	IN	OUT
PA_3	IN	OUT
PA_4	IN	OUT
PA_5	IN	OUT
PA_6	IN	OUT
PA_7	IN	OUT
PB_0	IN	OUT
PB_1	IN	OUT
PB_2	IN	OUT
PB_3	IN	OUT
PB_4	IN	OUT
PB_5	IN	OUT
PB_6	IN	OUT
PB_7	IN	OUT
PC_0	IN	OUT
PC_1	IN	OUT
PC_2	IN	OUT
PC_3	IN	OUT
PC_4	IN	OUT
PC_5	IN	OUT
PC_6	IN	OUT
PC_7	IN	OUT

Mode 0 port pin functions

Example –Mode 0

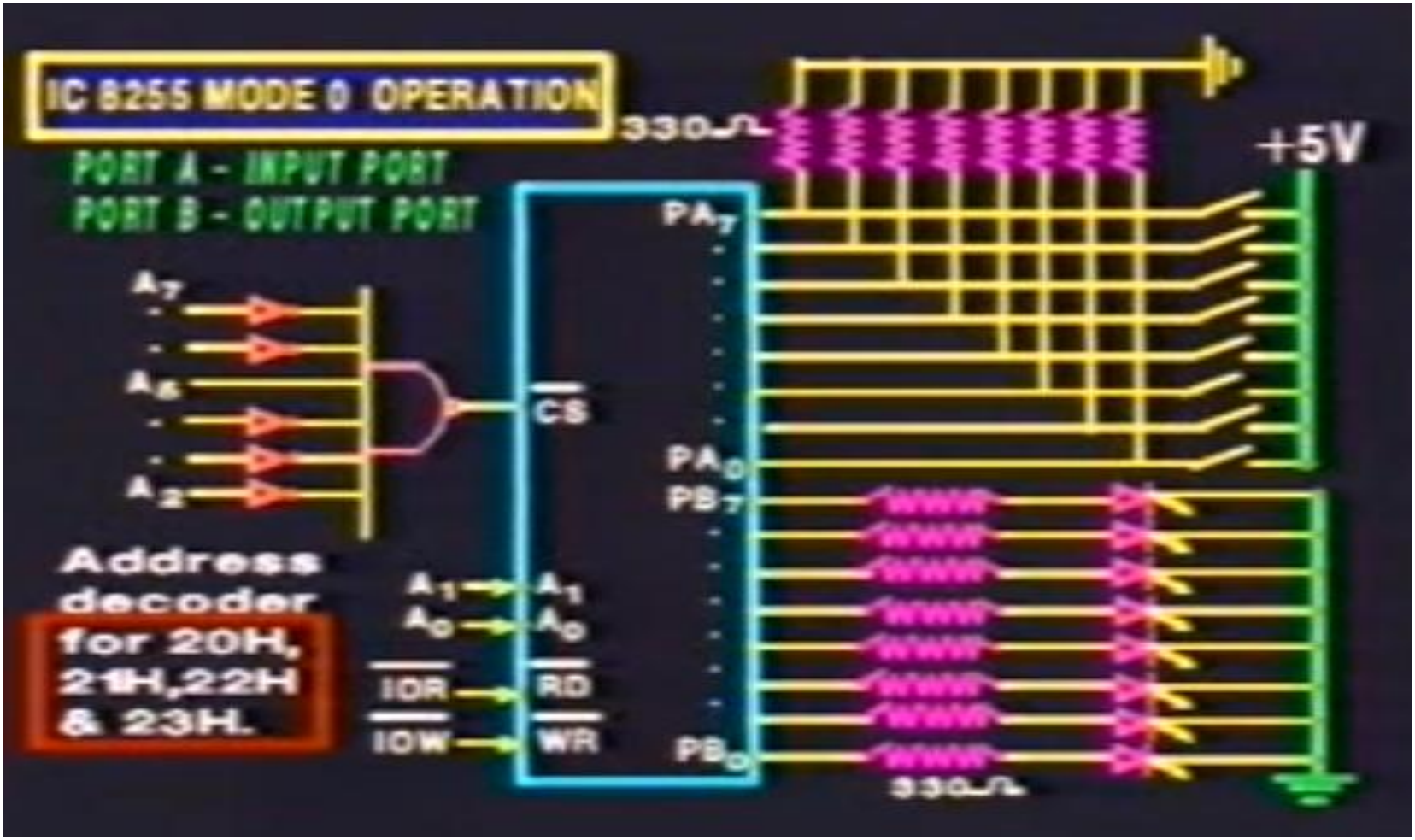

8255 PPI Contd.

Mode 1: Input or Output with Handshake

In this mode, handshake signals are exchanged between
the MPU and peripherals prior to data transfer.
The features of the mode include the following:

1. Two ports (A and B) function as 8-bit I/O ports.
   They can be configured as either as input or output ports.

2. Each port uses three lines from Port C as handshake signals.
   The remaining two lines of Port C can be used for simple I/O operations.

3. Input and Output data are latched.

4. Interrupt logic is supported.

- Mode 1 – Strobed I/O

Pin	MODE 1	
	IN	OUT
PA_0	IN	OUT
PA_1	IN	OUT
PA_2	IN	OUT
PA_3	IN	OUT
PA_4	IN	OUT
PA_5	IN	OUT
PA_6	IN	OUT
PA_7	IN	OUT
PB_0	IN	OUT
PB_1	IN	OUT
PB_2	IN	OUT
PB_3	IN	OUT
PB_4	IN	OUT
PB_5	IN	OUT
PB_6	IN	OUT
PB_7	IN	OUT
PC_0	$INTR_B$	$INTR_B$
PC_1	IBF_B	OBF_B
PC_2	STB_B	ACK_B
PC_3	$INTR_A$	$INTR_A$
PC_4	STB_A	I/O
PC_5	IBF_A	I/O
PC_6	I/O	ACK_A
PC_7	I/O	OBF_A

Handshake interrupt i/p port

When i/p device has data to send it checks if IBF (input buffer full) signal is 0.

If 0, it sends data on PB7-0 and activates STB* (Strobe) signal. STB* is active low.

When STB* goes high, the data enters the port and IBF gets activated.

If the Port interrupt is enabled, INT is activated. This interrupts the processor.

Processor reads the port during the ISS. Then IBF and INT get deactivated.

82C55: Mode 1 Strobed Input

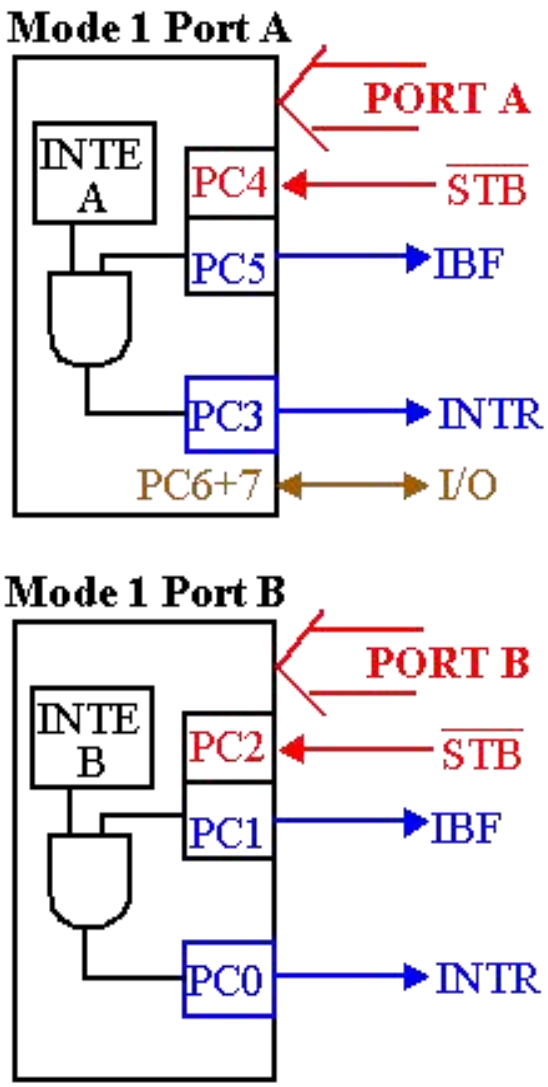

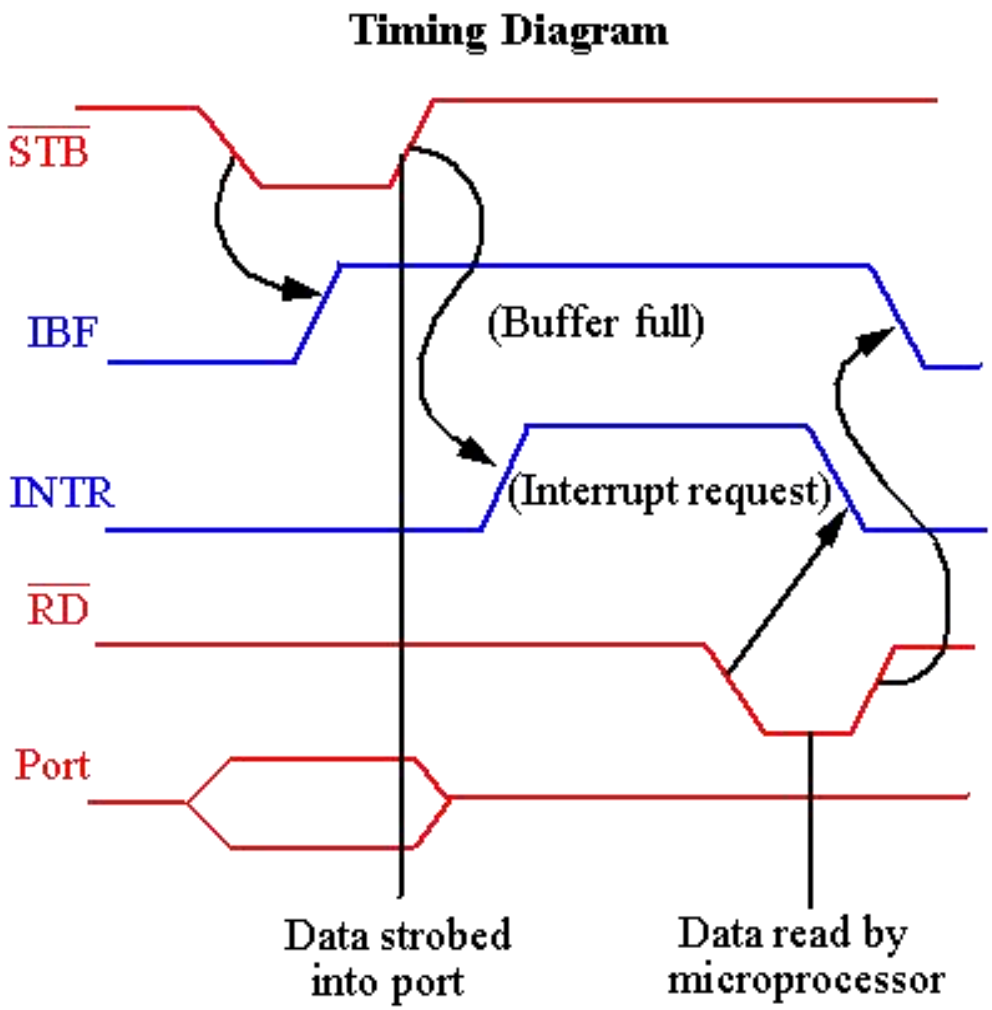

Signal definitions for Mode 1 Strobe Input

Handshake interrupt o/p port

When o/p device wants to receive data it checks if OBF* (output buffer full) signal is 0.

If 0, it receives data on Port and activates ACK* (Acknowledge) signal. ACK* is active low.

When ACK* goes high, the data goes out of the port and OBF* is set to 1.

If the Port interrupt is enabled, INT is activated. This interrupts the processor.

Processor sends another byte to the port during the ISS. Then OBF* and INT are reset to 0.

82C55 : Mode 1 Output Exam.

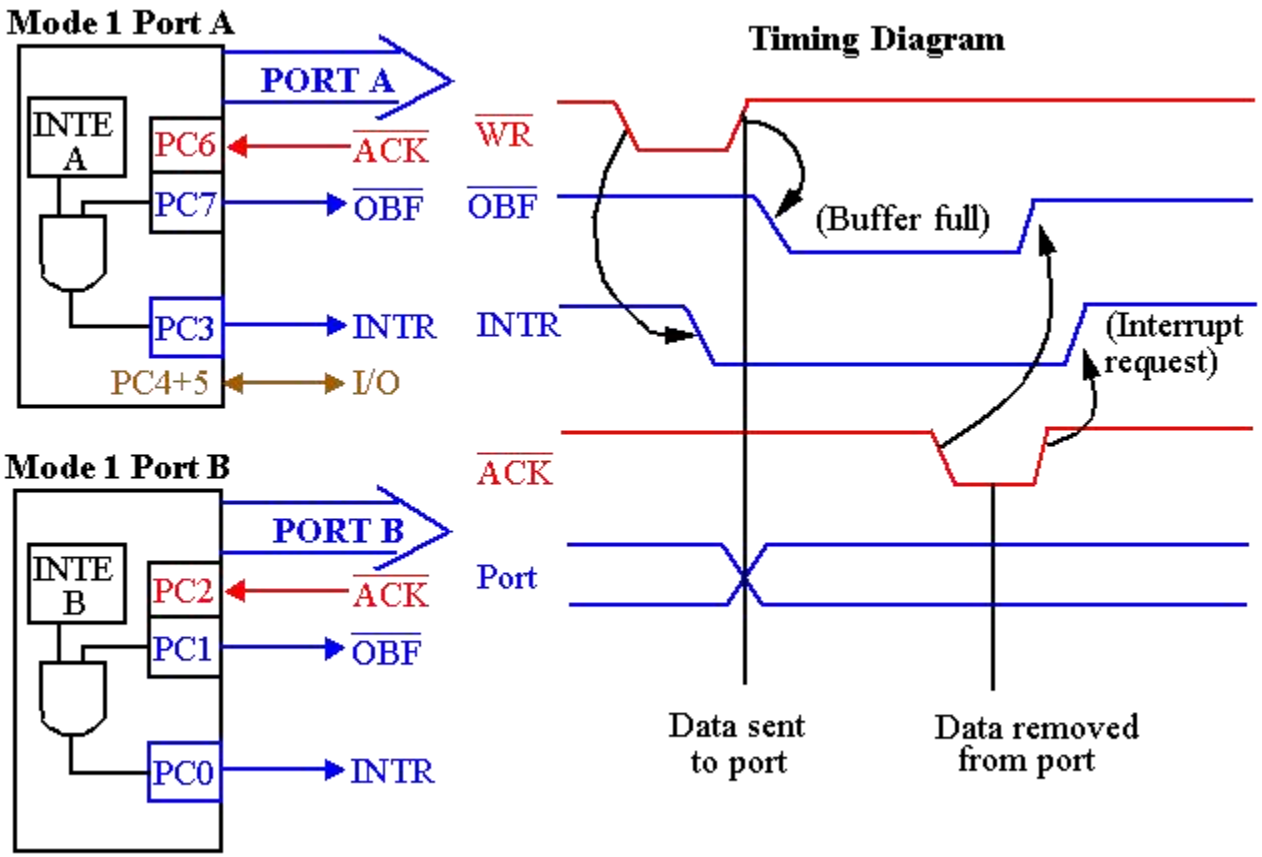

8255 PPI Contd.

Mode 2: Bidirectional Data Transfer

This mode is used primarily in applications such as data transfer between two computers.

In this mode, Port A can be configured as the bidirectional port Port B either in Mode 0 or Mode 1.

Port A uses five signals from Port C
as handshake signals for data transfer.

The remaining three signals from port C can be used either as simple I/O or as handshake for port B.

82C55: Mode 2 Bi-directional Operation

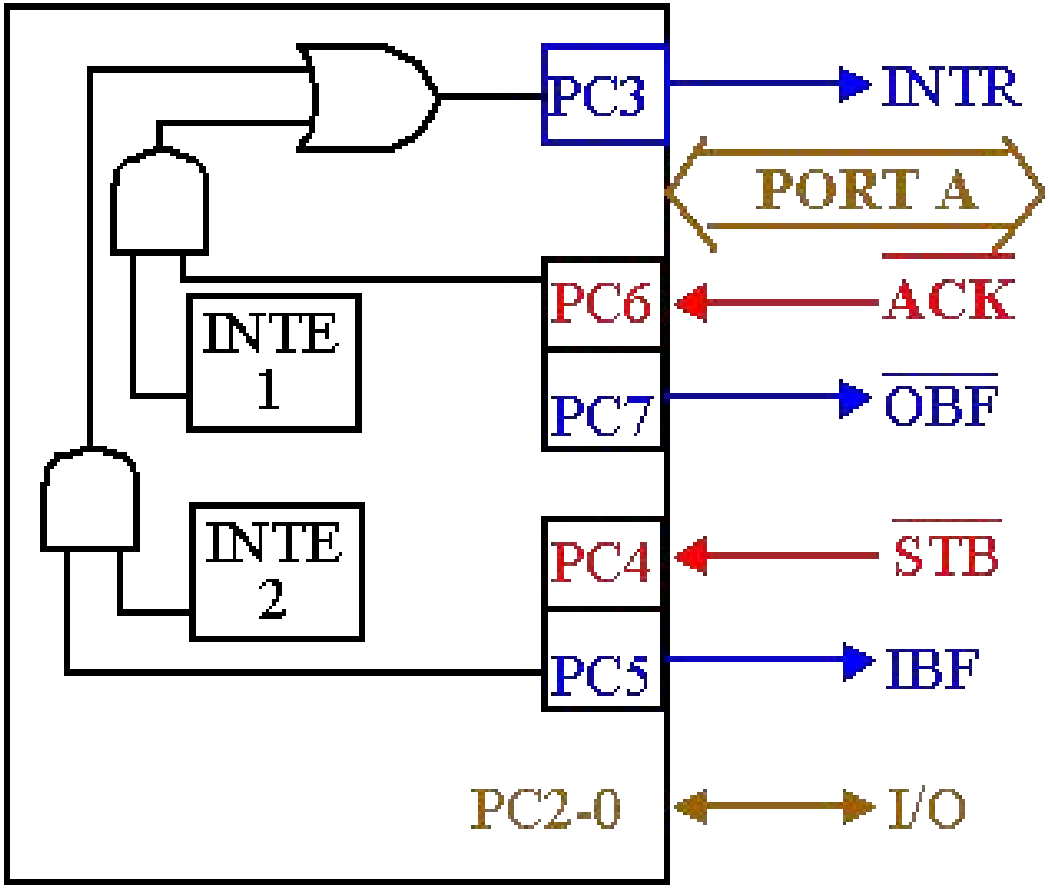

- Timing diagram is a combination of the Mode 1 Strobed Input and Mode 1 Strobed Output Timing diagrams.

Mode 2 Timing Diagram

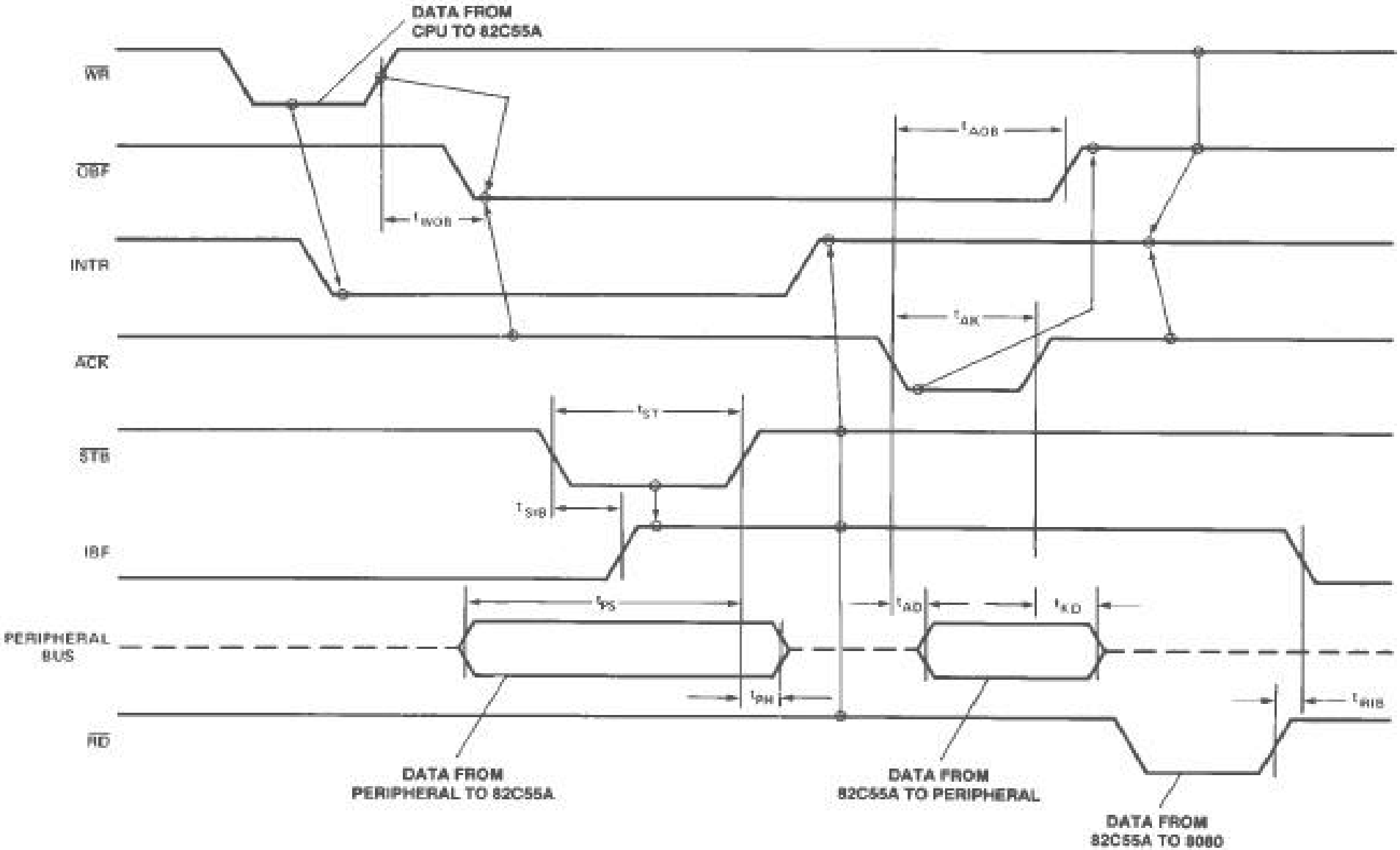

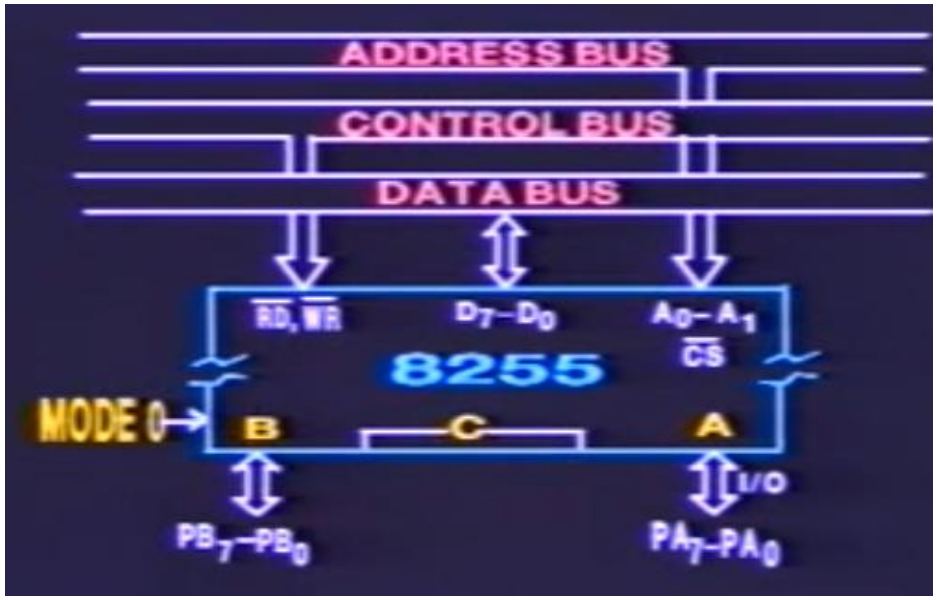
ADDRESS BUS
CONTROL BUS
DATA BUS
RD, WR
D7–D0
A0–A1
CS
8255
MODE 0
B
C
A
I/O
PB7–PB0
PA7–PA0

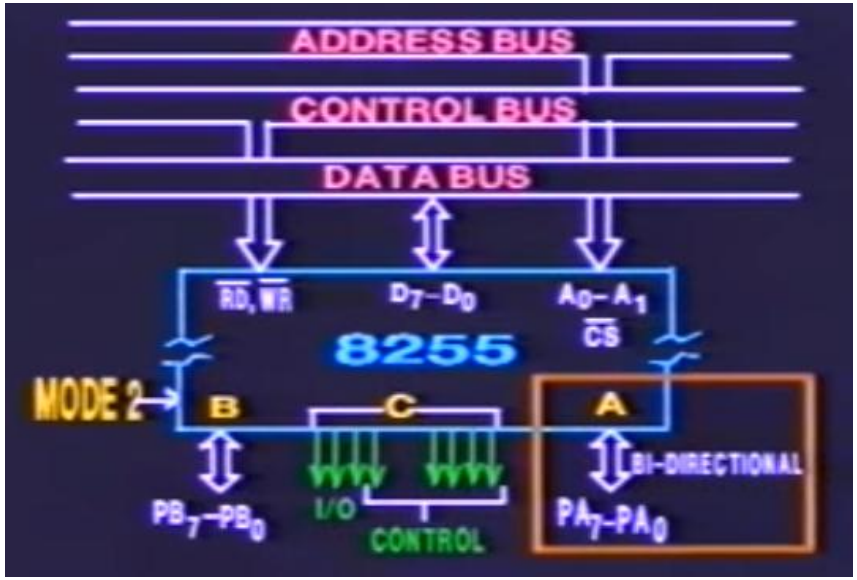
ADDRESS BUS
CONTROL BUS
DATA BUS
RD, WR
D7–D0
A0–A1
CS
8255
MODE 2
B
C
A
BI-DIRECTIONAL
PB7–PB0
I/O
CONTROL
PA7–PA0

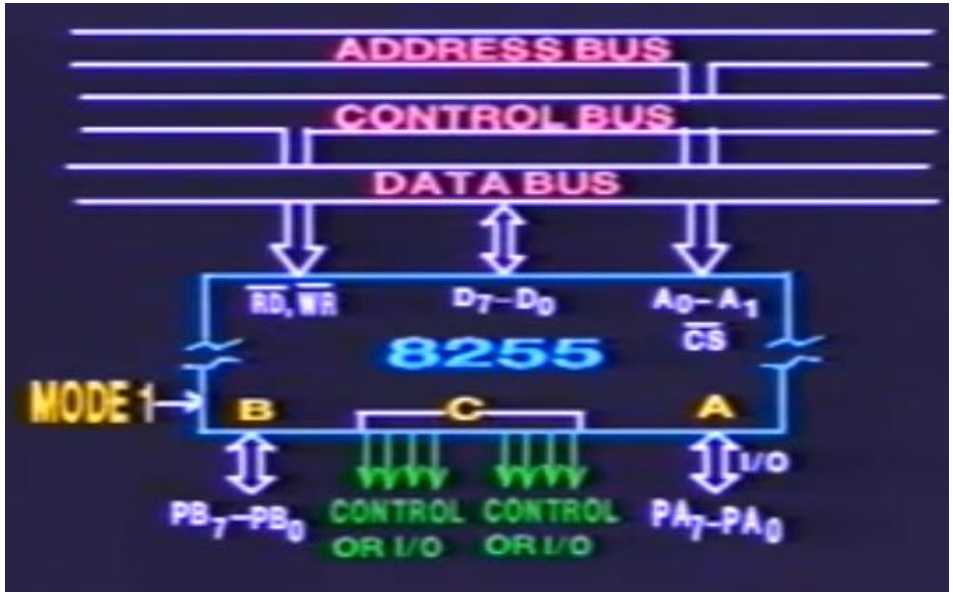
ADDRESS BUS
CONTROL BUS
DATA BUS
RD, WR
D7–D0
A0–A1
CS
8255
MODE 1
B
C
A
I/O
PB7–PB0
CONTROL OR I/O
CONTROL OR I/O
PA7–PA0

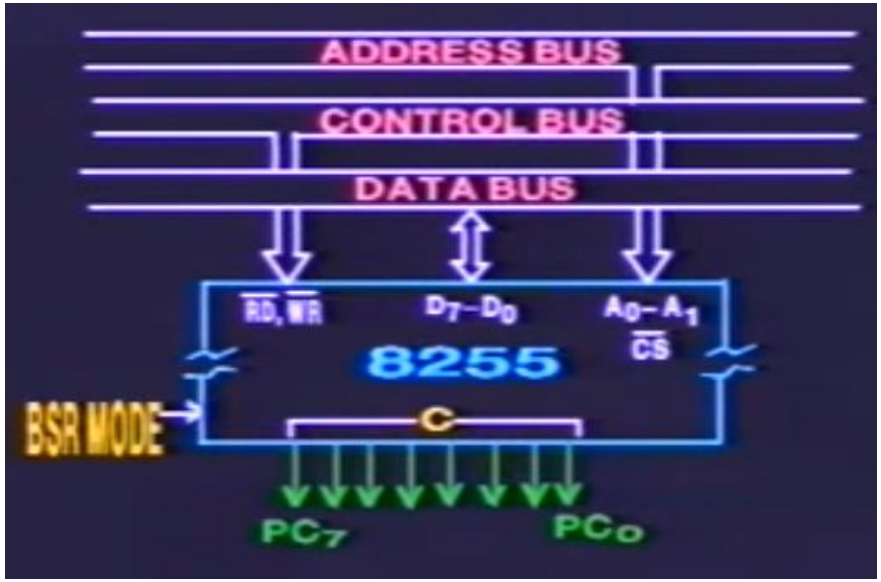
ADDRESS BUS
CONTROL BUS
DATA BUS
RD, WR
D7–D0
A0–A1
CS
8255
BSR MODE
C
PC7
PC0

82C55A Programmable Peripheral Interface (cont.)

EXAMPLE:

- What is the mode and I/O configuration for ports A, B, and C of an 82C55A after its control register is loaded with 82_{16}?

Solution:

Expressing the control register contents in binary form, we get

$$D_7D_6D_5D_4D_3D_2D_1D_0 = 10000010_2$$

Since D_7 is 1, the modes of operation of the ports are selected by the control word.

D_0 = 0 Lower four bits of port C are outputs.

D_1 = 1 Port B is an input port.

D_2 = 0 Mode 0 for both port B and the lower four bits of port C.

82C55A Programmable Peripheral Interface (cont.)

- The next for bits configure the upper part of port C and port A:

  $D_3 = 0$ Upper four bits of port C are outputs.

  $D_4 = 0$ Port A is an output port.

  $D_6D_5 = 00$ Mode 0 for both port A and the upper four bits of port C

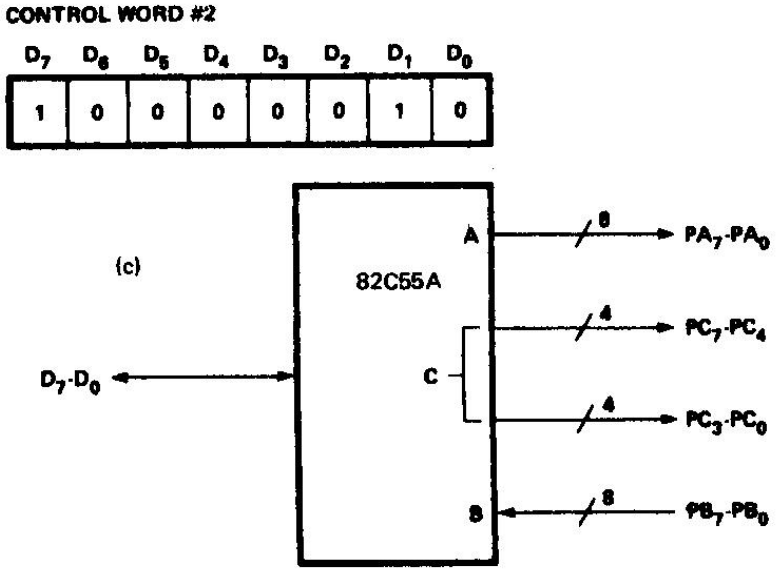

8255 MD Control word Contd.

Ex. 1: Configure Port A as i/p in Mode 0, Port B as o/p in mode 0, Port C (Lower) as o/p and Port C (Upper) as i/p ports.

Required MD control word:

1	0	0	1	1	0	0	0

= 98H

MD control

PA in Mode 0

PA as i/p

PC Upper as i/p

PB in Mode 0

PB as o/p

PC Lower as o/p

Reqd. instrns.
MOV AL, 98H
OUT 7FH, AL

8255 MD Control word Contd.

Ex. 2: Configure Port A as i/p in Mode 1, Port B as o/p in mode 1, Port C7-8 as i/p ports. (PC5-0 are handshake lines, some i/p lines and others o/p. So they are shown as X)

Required MD control word:

1	0	1	1	1	1	0	X	= BCH or BDH

MD control

PA in Mode 1

PA as i/p

PC Upper(C7-8) as i/p

PB in Mode 1

PB as o/p

PC3-0 as don't care

Reqd. Instrns.
MOV AL,BCH
OUT 7FH, AL

8255 MD Control word Contd.

Ex. 3:Configure Port A in Mode 2, Port B as o/p in mode 1. (PC5-0 are handshake lines for Port A and PC2-0 are handshake signals for port B)

Required MD control word:

1	1	0	X	X	1	0	X	= C4H / C5H..

MD control

PA in Mode 2

PA bidirectional

PC7-0 as handshake

PB in Mode 1

PB as o/p

PC3-0 as handshake

Reqd. instrns.
MOV AL, C4H
OUT 7FH, AL

8255 PCBSR Control word

Control port having Port C Bit Set / Reset control word

0	X	X	X	SB2	SB1	SB0	S/R*

PC bit set / reset control word

Don't cares

Select bit of PC to be set / reset

1 - Set to 1

0 - Reset to 0

0	0	0	→ Bit 0 of Port C
0	0	1	→ Bit 1 of Port C
	:		
	:		
1	1	1	→ Bit 7 of Port C

8255 PCBSR Control word contd.

Ex. 2: Reset to 0 bit 6 of Port C

0	X	X	X	1	1	0	0

= 0CH,…

PC bit set / reset control word

Don't cares

Bit 6 of PC

Reset to 0

Required instructions

MOV AL, 0CH

OUT 7FH, AL

8255 PCBSR Control word contd.

Ex. 1: Set to 1 bit 4 of Port C

0	X	X	X	1	0	0	1

= 09H,…

PC bit set / reset control word

Don't cares

Bit 4 of PC

Set to 1

Required instructions

MOV AL, 09H

OUT 7FH, AL

8255 Handshake signals

Where are the Handshake signals?

Port C pins act as handshake signals, when Port A and Port B are configured for other than Mode 0.

Port A in Mode 2 and Port B in Mode 1 is possible, as it needs only 5+3 = 8 handshake signals

After Reset of 8255, Port A , Port B , and Port C are configured for Mode 0 operation as input ports.

8255 Handshake signals Contd.

PC2-0 are used as handshake signals by Port B when configured in Mode 1. This is immaterial whether Port B is configured as i/p or o/p port.

PC5-3 are used as handshake signals by Port A when configured as i/p port in Mode 1.

PC7,6,3 are used as handshake signals by Port A when configured as o/p port in Mode 1.

PC7-3 are used as handshake signals by Port A when configured in Mode 2.

8255 PPI Contd.

Port A can work in Mode 0, Mode 1, or Mode 2

Port B can work in Mode 0, or Mode 1

Port C can work in Mode 0 only, <u>if at all</u>

Port A, Port B and Port C can work in Mode 0

Port A and Port B can work in Mode 1

Only Port A can work in Mode 2